REVISION	REVISION RECORD
A	ECN 3001790, RELEASE

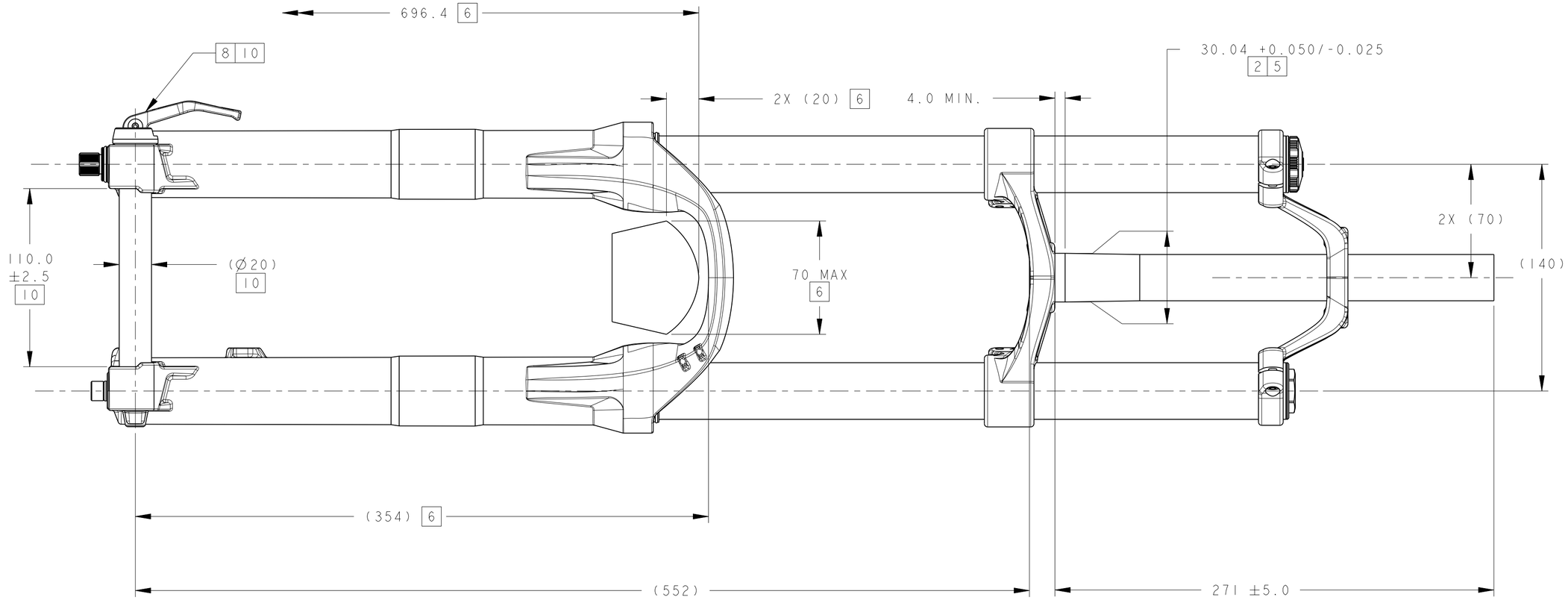

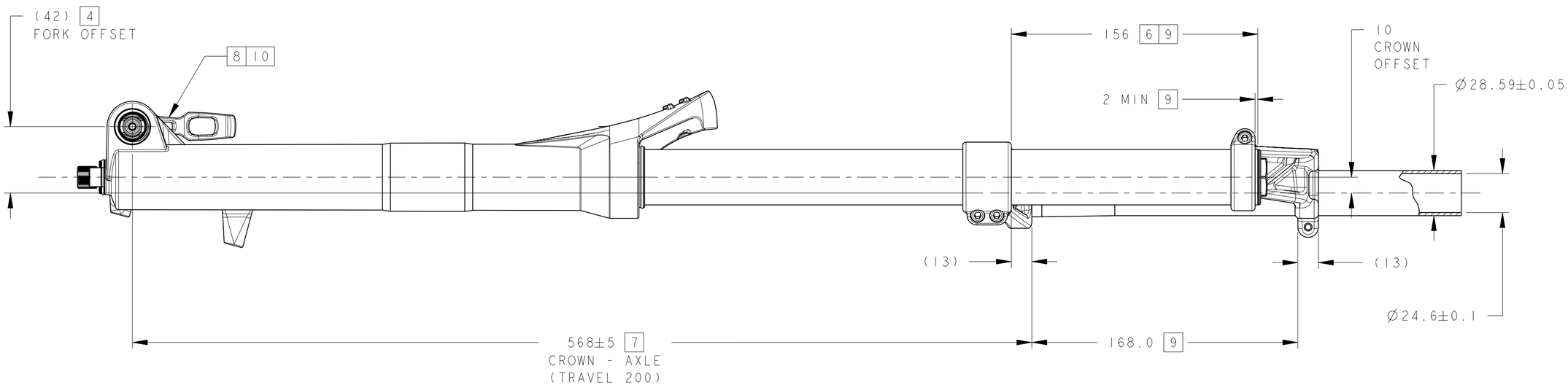

SEE NOTES, LOCATED SHEET 2 THIS DRAWING.

SHEET 1 OF 2

SRAM Corporation
Global Headquaters
1333 North Kingsbury
Chicago, IL 60622
USA 312-664-8800

REV C

CONFIDENTIAL - THIS DRAWING CONTAINS INFORMATION THAT IS PROPRIETARY TO SRAM CORPORATION AND MAY NOT BE DISCLOSED WITHOUT PERMISSION.

GEOMETRIC DIMENSIONING AND TOLERANCING TO BE INTERPRETED PER ANSI Y14.5M 1994

• INDICATES THE DIMENSION IS CRITICAL TO THE FORM, FIT OR FUNCTION OF THE PART OR PRODUCT.

ALL DIMENSIONS ARE mm

THIRD ANGLE PROJECTION

UNTOLERANCED LENGTH DIMENSIONS (mm)	
LENGTH DIMENSIONS	TOLERANCE
from 0.5 up to 6	± 0.1
over 6 up to 30	± 0.2
over 30 up to 120	± 0.3
over 120 up to 400	± 0.5
UNTOLERANCED ANGLE DIMENSIONS	
	± 5°

MATERIAL: N/A

DO NOT SCALE DRAWING

SCALE: 0.2 FORMAT: A2

Lifecycle Status: In Work

TITLE: SPEC, USER, MY09 BOXXER

DRAWING NUMBER: US-4015-020-000

VERSION: A.3

REVISION	REVISION RECORD
A	ECN 3001790, RELEASE

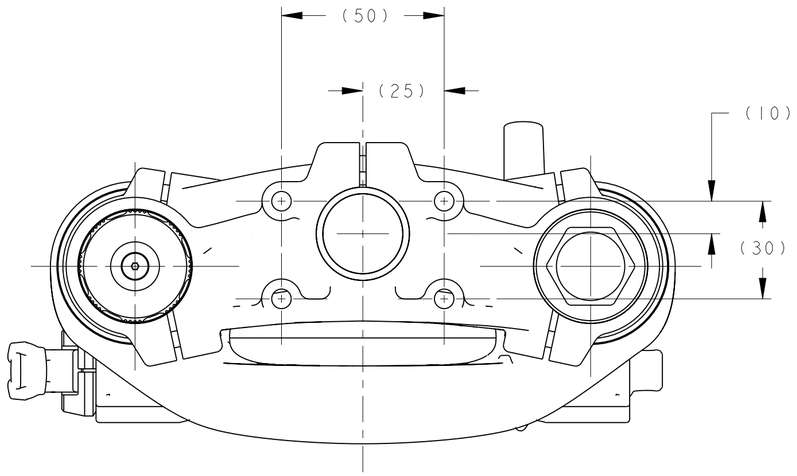

DIRECT MOUNT STEM BOLT PATERN

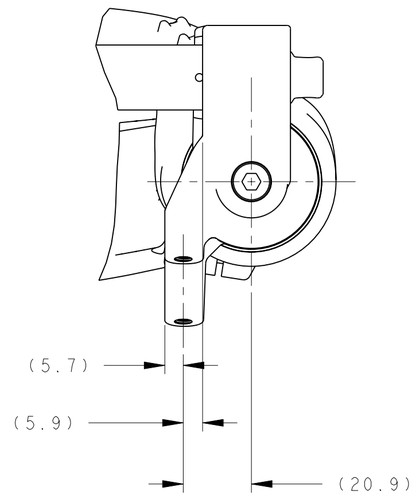

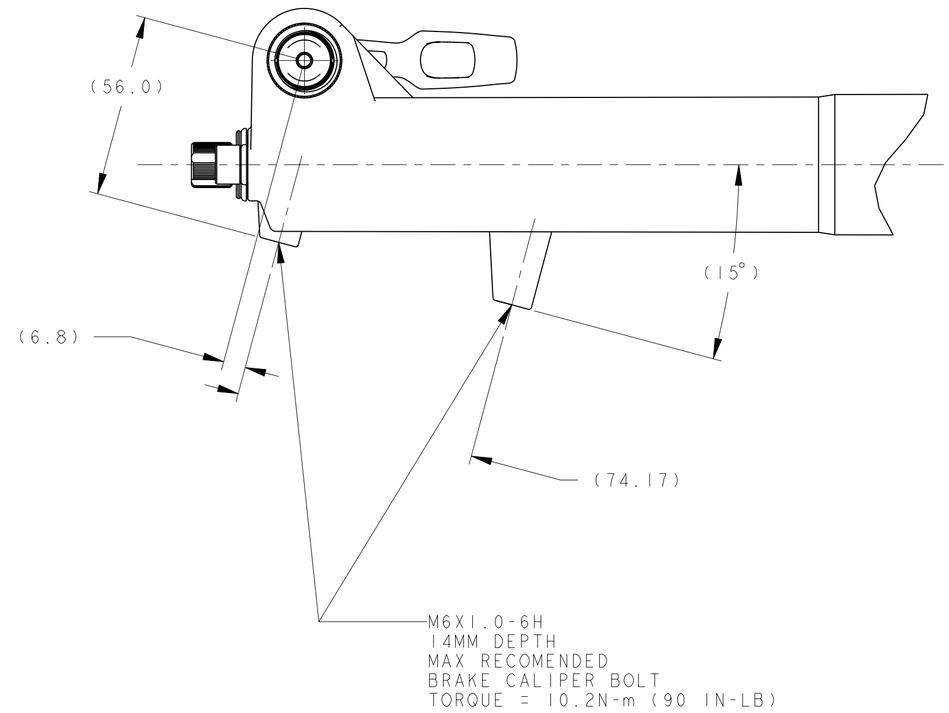

NOTES: (UNLESS OTHERWISE SPECIFIED)

1. DRAWING NOT TO SCALE, GENERAL SHAPE FOR DIMENSIONAL REFERENCE ONLY. BOXXER WORLD CUP MODEL SHOWN. SRAM RESERVES THE RIGHT TO CHANGE SPECIFICATIONS WITHOUT PRIOR NOTICE.
2. CROWN RACE TO BE MEASURE AS AVERAGE DIAMTER; 3 DIAMETRIC POINTS MIN.
3. REFERENCE DIMENSIONS, NOTED WITH PARENTESIS "( )" ARE FOR CUSTOMER DESIGN INFORMATION ONLY.
4. DIMENSION IS PERPENDICULAR OFFSET FROM STEERER TUBE AXIS TO FORK DROP-OUT (FORK OFFSET DIMENSION).
5. HEADSET CUP INSIDE DIAMETER MUST NOT BE LESS THAN STEERER TUBE DIAMTER +0.30 MM.
6. IMPORTANT: CUSTOMER IS RESPONSIBLE FOR ENSURING MINIMUM REQUIRED TIRE CLEARANCE. DO NOT EXCEED MAXIMUM TIRE ENVELOPE INDICATED ON THIS DRAWING.
7. FORK GEOMETRY BASED ON 200MM TRAVEL.
8. REFER TO BOXXER USER MANUAL FOR THRU AXLE / MAXLE INSTRUCTIONS.
9. HEIGHT LOCATION OF UPPER CROWN IS ADJUSTABLE. VARIATION ALLOWS CROWN TO FIT HEAD TUBES OF DIFFERING LENGTHS. LOWER CROWN IS SET TO 156MM FROM TOP OF UPPER TUBE AND IS ASSUMED FIXED. TALL BOXXER CROWN SHOWN.
10. MAXIMUM COMPATIBLE HUB OUTER SHOULDER DIA. ∅25.0MM REQUIRED HUB THRU AXLE HOLE DAIMETER IS ∅20.05MM MIN.
11. 3D FILES: US-4015-020-000.IGS, US-4015-020-000.STP AVAILABLE UPON REQUEST.

SRAM

SRAM Corporation
Global Headquaters
1333 North Kingsbury
Chicago, IL 60622
USA 312-664-8800

REV C

CONFIDENTIAL - THIS DRAWING CONTAINS INFORMATION THAT IS PROPRIETARY TO SRAM CORPORATION AND MAY NOT BE DISCLOSED WITHOUT PERMISSION.

GEOMETRIC DIMENSIONING AND TOLERANCING TO BE INTERPRETED PER ANSI Y14.5M 1994

• INDICATES THE DIMENSION IS CRITICAL TO THE FORM, FIT OR FUNCTION OF THE PART OR PRODUCT.

ALL DIMENSIONS ARE mm

THIRD ANGLE PROJECTION

UNTOLERANCED LENGTH DIMENSIONS (mm)	
LENGTH DIMENSIONS	TOLERANCE
from 0.5 up to 6	± 0.1
over 6 up to 30	± 0.2
over 30 up to 120	± 0.3
over 120 up to 400	± 0.5
UNTOLERANCED ANGLE DIMENSIONS	± 5°

MATERIAL: N/A

DO NOT SCALE DRAWING

SCALE: 0.2 FORMAT: A2

Lifecycle Status: In Work

TITLE: SPEC, USER, MY09 BOXXER

DRAWING NUMBER: US-4015-020-000

VERSION: A.3